Stingray Mini RGBW 80w IP

USER MANUAL

(Version 1.2)

Stock code : SRAYM RGBW 80W IP

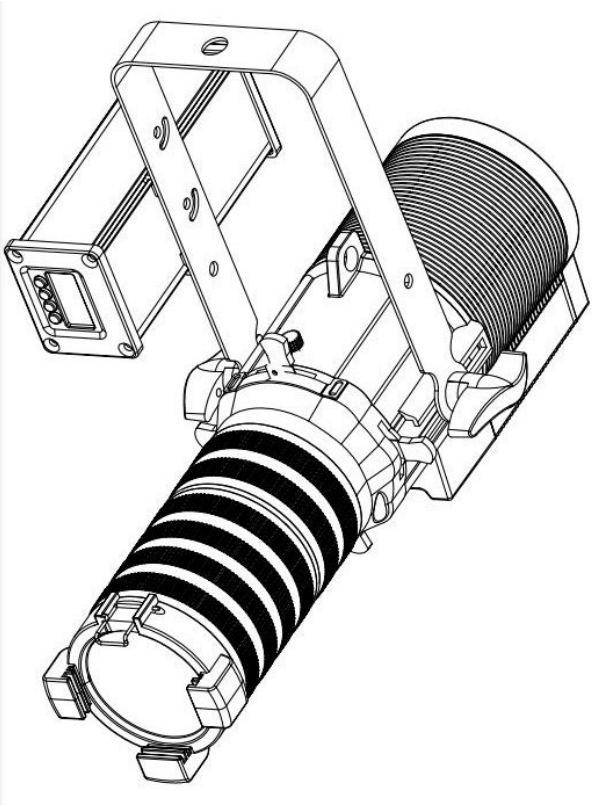

ElektraLite (a division of Group One),
70, Sea Lane, Farmingdale, NY11735, U.S.A.
T. +1 (631)-396-0184. F. +1 (631)-396-0190
WWW.MYELEKTRALITE.COM

1. Unpacking

Thank you for choosing the **elektraLite Mini RGBW 80w IP** fixture. For your own safety and to avoid any problems during installation or in operation, please read this manual before installing the fixture. This manual covers important information on installation and applications. Please keep this manual for future reference.

ElektraLite Mini RGBW 80w IP profile spot fixture uses a single 80 watt COB led. Please unpack the **elektraLite Mini RGBW 80w IP** carefully and check whether it was damaged in shipping.

2. Safety Instructions. (Please read them).

The fixture has left the factory in perfect condition. In order to maintain this condition and to ensure a safe operation, it is absolutely necessary for the user to follow the safety instructions and warning notes written in this user manual.
ElektraLite Mini RGBW 80w IP is a high voltage fixture. Be careful when dealing with high voltages.
Please read this manual. If you do not read this manual and damages occur to the elektraLite Mini RGBW 80w IP, then it could void the warranty.

The electric connection must carry out by a qualified person and it is absolutely essential that the **elektraLite Mini RGBW 80w IP** be **grounded**. Under no circumstances break off the ground pin on the Edison plug or use the fixture where a ground is not present. The ground pin for the **elektraLite Mini RGBW 80w IP** is there for safety.

Do not grab the power cord and pull out the Edison plug by pulling on the power cord itself. This could cause damage to the cord, Edison plug and/or the fixture itself.

Please keep the **elektraLite Mini RGBW 80w IP** away from children and the general public. Please be intelligent and use common sense when operating the **elektraLite Mini RGBW 80w IP.**

The outside body of the elektraLite Mini RGBW 80w IP can get HOT. Use extreme caution and heat protection gloves when handling a hot fixture.

3. General Guidelines.

ElektraLite Mini RGBW 80w IP is a lighting fixture for professional use on stages, in clubs, theatres, churches etc.
ElektraLite Mini RGBW 80w IP should only be operated at between 120 to 240 volts.
ElektraLite Mini RGBW 80w IP should not be operated 24/7 (24 hours a day; 7 days a week).
ElektraLite Mini RGBW 80w IP needs operation breaks to ensure that it will work for a long time without problems. Please do not shake the **elektraLite Mini RGBW 80w IP** and avoid using brute force when installing or operating it.
When choosing the location to install the **elektraLite Mini RGBW 80w IP**, please make sure that it is not exposed to extreme heat. Make sure that the fixture has a good amount of free space around it for air flow. Do not install it in a confined space or have insulation around the fixture. The minimum distance between the **elektraLite Mini RGBW 80w IP** and the illuminated surface must be more than 3 feet.
Always mount the **elektraLite Mini RGBW 80w IP** with an appropriate safety cable.
Operate the **elektraLite Mini RGBW 80w IP** only when you are familiar with the features of the fixture. Do not permit operation by persons not qualified.
All modifications to the **elektraLite Mini RGBW 80w IP will invalidate the warranty. There are absolutely no exceptions.**
If **elektraLite Mini RGBW 80w IP** is operated in any way different to the one described in this manual, **elektraLite Mini RGBW 80w IP** maybe damaged and the guarantee will be void.

4. Installation

Please ensure that the **elektraLite Mini RGBW 80w IP** is hung using the appropriate "C" clamp or half cheeseboro. A safety chain or cable should also be used as a secondary point of holding the fixture in case the clamp comes loose. Never hang the fixture without a safety chain or cable. Make sure, if you are using a Gel frame (Gel holder), that it is clipped into position correctly and cannot come loose.
If you are not qualified or have any doubts about hanging the **elektraLite Mini RGBW 80w IP** then do **NOT** hang it.
Do not clamp the safety cable to the U bracket or clamp. That is not a secondary safety point.
A secondary safety point is any point that will adequately hold the **elektraLite Mini RGBW 80w IP** if the "C" clamp or half cheesboro fails. Then the safety cable would be the backup and stop the fixture from falling to the ground. So do **NOT** fix the safety cable to the same place that the "C"clamp is attached.

Installation during construction.

Many times fixtures are installed during the construction phase of a building. It is imperative that the fixture is protected during this phase. A lot of dust is usually created. This dust can adversely affect the fixture. Specifically, of course, in coating the lenses and therefore reducing the output. It is therefore strongly advised to keep the fixtures covered up during the construction phase and **not** used. If you cover it up, do not use it because you could burn up the cover and/or damage the fixture.

Removal of DMX/Power Module from Yoke.

The DMX/Power module can be easily removed from the yoke arm by pulling the pin with the ring attached to it.
The module can then be located up to 3 meters (10 feet) from the fixture using the extension cable provided. A second 3 meter (10ft) extension cable can be purchased to give a maximum of about 20ft remote location of the DMX/Power module. Please note that no more than 20ft of extension cables can be used.

5. Grounding. (VERY IMPORTANT!!!)

Always make sure that there is sufficient grounding (earth) for the fixture. This is not only imperative within the circuit that the fixture is being connected to, but also make sure there is sufficient grounding into the building.
One further check : the ground to neutral voltage for each circuit. In a lot of buildings, voltages across these can damage fixtures or cause operational problems both for the fixture and DMX.
Please review these two important points with a qualified electrical contractor. If in any doubt, have an independent qualified third party electrical contractor check the installation, **well before** commencing installation.

6. DMX-512 Control Connection

Connect an XLR cable to the female 5-pin XLR output of the DMX controller. The other end should be connected to the male 5-pin XLR input of the **elektraLite Mini RGBW 80w IP**. Then daisy-chain out of the first **elektraLite Mini RGBW 80w IP** into the next **elektraLite Mini RGBW 80w IP** or other dmx device. Never **"Y"** split the DMX connection.
If more cable is needed, then it should be two core, screened cable fitted with a 5 pin XLR input and output connector. Please refer to the diagram below.

DMX -output
XLR mounting-sockat



1:Ground
2:Signal(–)
3:Signal(+)
4:N.A.
5:N.A.

DMX -input
XLR mounting-sockat



1:Ground
2:Signal(–)
3:Signal(+)
4:N.A.
5:N.A.

DMX-512 connection with DMX terminator

For installations where the DMX cable has to run a long distance or is in an electrically "noisy" environment, it is recommended that a DMX terminator is used. This helps prevent corruption of the digital control signal. The DMX terminator is simply a 5 pin XLR plug (male) with a 120 Ω resistor connected between pins 2 and 3. It is then plugged into the output XLR socket of the last **elektraLite Mini RGBW 80w IP** or other dmx device in the chain. Please see illustration below.

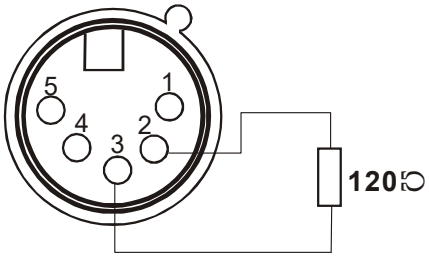

7. Features & Specifications.

Features：
* 1 x 80W COB LED (RGBW 4IN1)
*Long life LED with low power consumption
*High quality optical system with uniformed flat field
*Manual zoom system from 15°-30° or 25°-50°
*4 different user selectable dimming curves
*Dimming Frequency: 500HZ - 25000HZ user selectable
*Die casting aluminum housing design
*4 laser cut shutter blades
*0-100% Smooth linear dimmer
*2 DMX profiles (4 and 8 channels)
*RDM/DMX512, master-slave, or static mode, sound mode
*5-Pin XLR connectors IN and THRU
*Gel/color slot & gobo slot are provided for color and image projection.
*Fan-less convection cooling
*Operating Temperature: -10℃ to 40℃ (14F to 104F)
*Ingress Protection Rating of 65 (IP65).
Specifications：
*Input Voltage:AC100-240V 50/60Hz
*Max. Power: 80W
*Dimensions: 383mm x 202mm x 280mm (15.08”x8.0”x11.02”)
*Packing Size: 51cm x 25.7cm x 20cm (1pc/carton), 55cm x 53cm x 41cm (4pcs/carton)
*Packing Size: 20.08” x 10.11” x 7.87” (1pc/carton), 21.65” x 20.87” x 16.14”(4pcs/carton)
*Net Weight: 4kgs (8.8 lbs)
*Gross Weight: 5kgs (11 lbs)

8. Drawings. (All measurements are in mm. 1 inch is 25.4mm).

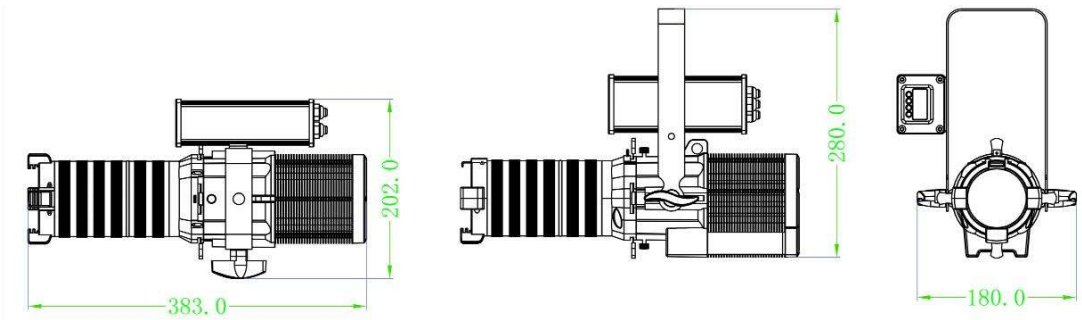

9. Menus in the fixture.

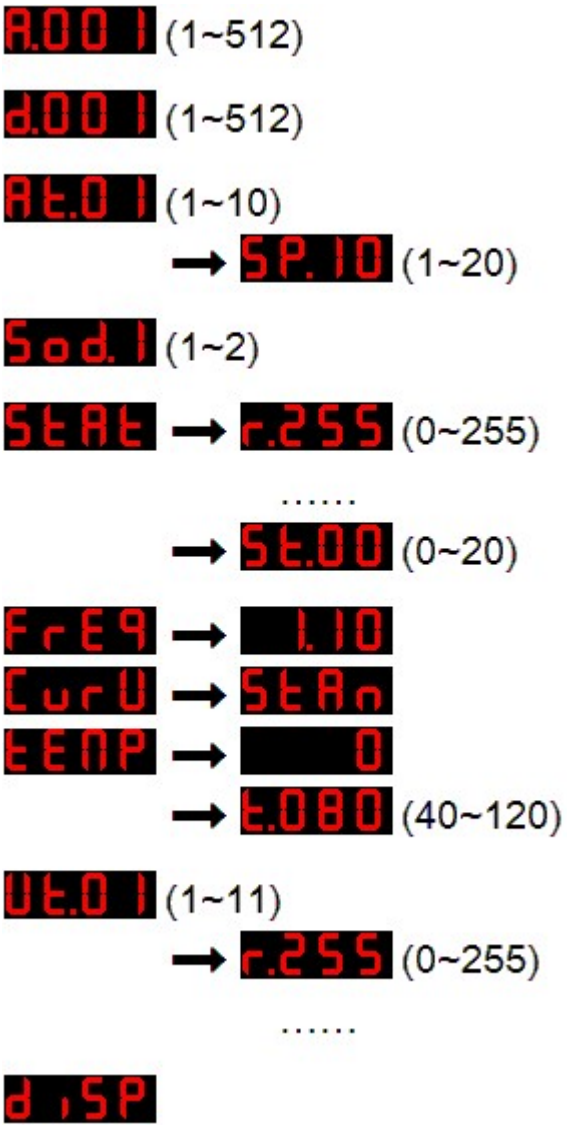

Menus：

The first list is the root menu (press MENU to move through the list), the second list is the submenu (press ENTER to get into the submenu).

If the menu includes a decimal point, then that is data (a number) which can be changed using the Up/Down buttons.

Button operation：

Use the “ENTER” Button to save data. For example if you make the dmx channel 200 then you must press “ENTER” to save that information.

The “UP/DOWN” buttons have no function if the menu does not have a decimal point.

If the screen shows a decimal point, then the UP/DOWN buttons can adjust the data after the decimal point. Do not forget to press “ENTER” to save the data.

Key lock function. (Remember this!)

After power-on or screen saver, it will enter the key lock mode, and display four boxes "----", which means "please enter a 4-digit password". Note that only the input of "up" and "down" keys will be accepted at this time. .
Press the keys in the following order: up, down, up, down, "udud" will be displayed in turn, and then press the "OK" key to unlock.

If you accidentally press the wrong button, for example, press "Up" for the first two digits, "uu--" will be displayed. At this time, please continue to press the button to complete the 4-digit input, such as "uuuu", and then press the "OK" button. Since the password is incorrect, the system will clear the original input and display the four-bar "----" again. At this time, enter the correct password "udud", and then press the "OK" key.

Menu		State	Operation		Notes
Main menu	**submenu**				
	No submenu	A: advance	Use the up/down buttons to adjust	Adjust the DMX address	A = Advance mode which basically means that the fixture is running in 8 channel mode (profile). D = standard mode which means the fixtures is running in 4 channel mode.
			Press Enter to…..	Save the DMX address	
	No submenu	d: dmx	Use the up/down buttons to adjust	Adjust the DMX address	
			Press Enter to…..	Save the DMX address	
	One submenu	At: auto	Use the up/down buttons to adjust	Choose the program	
		Auto run model		Enter submenu	
		SP: speed	Use the up/down buttons to change the speed	Adjust speed	
		Choose the speed of auto run	Press Enter to save		
	No menu	Sod: sound. A bass beat will turn the output of the fixture on or off	Use the up/down buttons to change the sensitivity	Change to sound control mode	
		Sound control mode	Press Enter to save		
	Has menus	StAt = static	Press Enter	Pressing Enter moves the display into the submenu	If a DMX controller is not being used, then the fixture can be set up in a static (manual) mode. All colors can be adjusted to any level and then saved. The resultant output can then be strobed as well, if required.
		static mode			
	……	r、G、b、W……	First us the up/down buttons to choose the color that needs to be added or changed	Press Enter to get “into” the color	
		Set color value from 000 to 255 (max).	Press Enter to save the value and get back to choosing the next color.		
		St: strobe	Use the up/down buttons to choose a strobe value from slow to fast.	Change the strobe data	
		Strobe and its speed	Press Enter to save the strobe speed.	Save and change	
	One submenu	FrEq:frequency	Press Enter to go into the display to change the frequency		
		Unit: KHz	Use the up/down buttons to change the frequency (Khz).	Adjust frequency	
		Range：0.55~25.0	Press Enter to save the KHz value		

	One submenu	CurV:curve	Press Enter to see the first curve (Standard).		For explanation of the different curves, please go to Section in this manual.
		StAn:Standard	Use the up/down buttons to		
			choose the dimmer curve.		
		inCA: Incandescent	Once chosen, press Enter to		
			save the curve.		
		LinE:Linear			
		quiC:Quick			
	two submenu	tEMp: temperature			It is **strongly** advised that no change is made to the temperature settings.
		temperature control			
		current temperature			
		T= top (max) temp setting			
		Set the temp protect value			
	multiple submenus	Wt: white	Use the up/down buttons to adjust		Ut is better written as Wt which stands for White Temperature. This is where the final color temperature can be set or changed. This set up is similar to STATIC mode.
		Color temperature setting	Press Enter to get into the colors		
		r、G、b、W……	Use the up/down buttons to adjust		
	……	Adjust color value from 000 to 255 (max)	Press Enter to save the first color and then move to next color		
	No submenu	diSP: display	Press Enter reverses the display		
	No submenu	rESt: reset	Press Enter followed by UP, DOWN, UP, DOWN to reset.		This will reset everything. So be careful in choosing this function!!

10. Screen protect / Lock out. (Remember this again!)

Many user, particularly in the broadcaster industry asked us to have a lock out of the functions in the menu, to stop accidental changes in the settings. So when the fixture is first powered up the password will be needed. The screen will have 4 lines (- - - -) and the password must be keyed in. Use the up/down buttons and carefully do the following button pushes in this order "UP, DOWN, UP, DOWN, ENTER". This is the password.
If the wrong order is pressed or a wrong key, just continue to press a key until all 4 spaces are full. Then press ENTER. The 4 lines will return and the correct password can be input into the fixture. Do not forget the ENTER after UP, DOWN, UP, DOWN sequence is complete. (the screen shown below is what is seen as up, down, up, down is keyed into the fixture. Also note that after 15-20 seconds, if no button is pressed, then the input of the password will be required.



11. Profiles (8ch or 4ch)

8CH Mode (when running in main Menu A001 to A512)

channel	DMX value	function	mark
1	000~255	dimmer	
2	000~255	color 1 (red)	
3	000~255	color 2 (green)	
4	000~255	color 3 (blue)	
5	000~255	color 4 (white)	
6	000~30	no effect	
	031~200	multi color change	
	201~205	color temperature 1 (3200K)	This can be set in the menu. See UT (WT). So Color Temperature 1 (CT1) = 201-205. CT2 = 206-210, CT3 = 211-215 and so on.
	……	color temperature 2~10 (each 5 data is a color temperature level)	
	250~255	color temperature 11 (10000K)	
7	0~10	no strobe	this channel controls the speed when running the build-in program
	11~255	speed of strobe (255 is the fastest)	
8	0~20	dimmer speed 4	This is the slowest & softest dimmer curve
	21~40	dimmer speed 3	
	41~60	dimmer speed 2	
	61~80	dimmer speed 1	This adds the smallest delay to changes in color values
	81~99	dimmer speed turned off	There is no delay when the colors are changed in value.
	100~109	In-built program 1	
	……	each 10 data is a program (so 110-119 is in-built program 2	
	190~199	inner program 10	
	200~240	change color by sound control	A bass beat will cause the colors to change
	241~255	strobe by sound control	A bass beat will trigger a strobe effect

4CH Mode (when running in main Menu D001 to D512).

channel	data	function
1	0~255	color 1 (red)
2	0~255	color 2 (green)
3	0~255	color 3 (blue)
4	0~255	color 4 (white)

12. CurU (Dimmer Curves).

The software has the ability to manipulate the way the dimming of the led reacts to the dmx input. By chosing one of the 4 CurU any change in the value of the dmx signal will result in different response times of the increase (or decrease) in brightness. This, in turn, will also affect the smoothness of the dimming.

Standard:- This is a simple curve where brightness change is most noticeable at the low and high ends of the intensity curve. Standard has a slight lag time when the dmx signal is changed to give a smooth intensity transition. It does also allow fast (bump) changes in the intensity as well. This the best choice in the majority of applications.

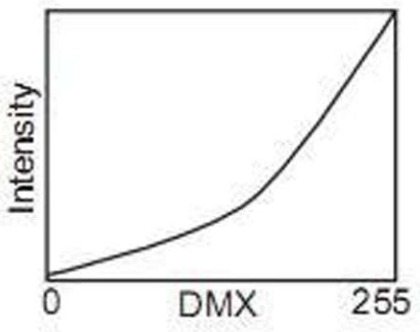

Incandescent:- The incandescent curve mimics the response of a tungsten lamp on a normal dimmer. The delay in intensity change is noticeable throughout all changes. So using the bump buttons to flash on and off the led will show a delay just like a Par lamp does (or did!).

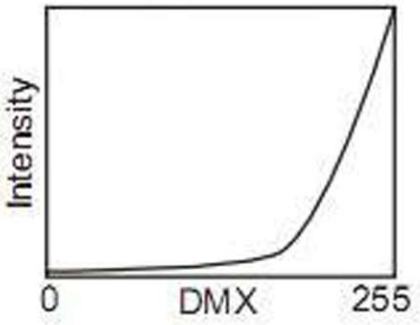

Linear :- Linear is exactly as the word describes. It's a straight line with no curves. There is a slight delay in response time to accommodate smoothness. However fast (bump) changes in the intensity can also be achieved.

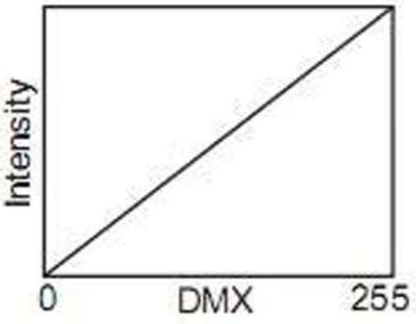

Quick :- Quick is the standard curve but with the smoothness removed. So no delay in reacting to any change in brightness. This gives a very "staccato" look to any changes in brightness.

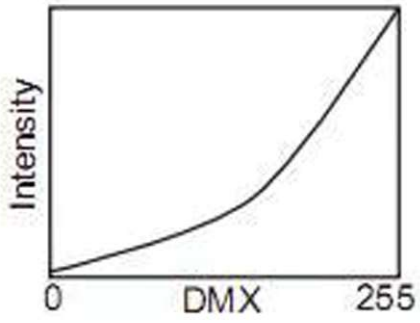

13. Cleaning and maintenance.

Now ignoring maintenance and cleaning is very good way of creating problems "down the road" and many companies and installations do just that. However the net result is, no matter what the fixture, premature failure!
Changing the oil in a car, most people do on a regular basis.
So with the fixtures, regular maintenance it an excellent practice, if you want the fixtures to last.
So what is the maintenance for the fixture?

Turn off the **elektraLite Mini RGBW 80w IP.**
Using a small vacuum cleaner, suck the dust and “fur balls” from the body of the fixture, especially around the heat sink fins at the rear of the fixture.
How often should the fixture be cleaned? It depends on where the fixture is located. If in a very dusty location then once a week. We suggest giving the fixture a quick “visual inspection” every week. If they are up in the air and you cannot see them well, then get a pair of binoculars and do the inspection through them.

The front lens should be cleaned so the light output is maintained.
The shutter blades sometimes require cleaning as well.
With the **elektraLite Mini RGBW 80w IP** turned off, use only a moist lint-free cloth. Never use alcohol or solvents to clean the fixture. Never spray anything onto the fixture at the front or in any place on the fixture.

14. Technical Specification.

- Operating voltage 100 – 240v
- Frequency 50 – 60 Hertz
- 80w IP COB RGBW led

ElektraLite is a division of Group One. Group One and its divisions are constantly improving their product range and we reserve the right to make changes without prior notice.